Fiber optic cable mechanical performance testing standards include

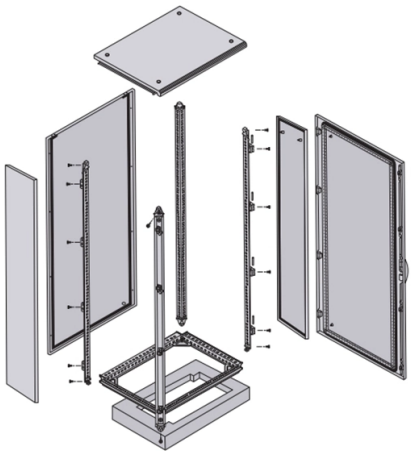

Overview

IEC 60794 is the primary standard for fiber optic cable construction, mechanical performance, and environmental resistance. It explains the roles of major standards organizations, key optical performance parameters, mechanical and appearance. IEC 60794 is the international standard series governing the design, construction, and performance verification of fibre optic cables. Published by the International Electrotechnical Commission, it defines the mechanical, environmental, and optical tests that every cable must pass before it can be. Fiber optic networks are built on well-defined standards that ensure quality, performance, and interoperability. Use proper testing methods like one-cord referencing, visual inspections, and calibrated equipment to get accurate and repeatable results.

Article Content

Fiber Optic Standards & Testing Guide for Cables

Explore international standards and testing for fiber optic cables, MPO/MTP, and connectors. Understand performance, reliability, and compliance.

IEC 60794 Compliance: The Complete Guide to Fibre Optic Cable

Typically includes fibre attenuation at 1310/1550 nm (100% of fibres), cable length verification, visual inspection, and proof testing (minimum tensile screen).

Fiber Optic & Cable Standards Guide | FiberMania Standards

© 2026 QK FIBER SYSTEMS - All rights reserved

IEC 60794 is the primary standard for fiber optic cable construction, mechanical performance, and environmental resistance. It includes a comprehensive set of test methods for

Fiber Testing Standards 2025 Guide for IEC and TIA

Follow the latest IEC, TIA, and FOA fiber testing standards in 2025 to ensure your network stays reliable and meets legal and insurance requirements.

The FOA Reference For Fiber Optics

Testing is the subject of the majority of industry standards, as there is a need to verify component and system specifications in a consistent manner. A list of fiber optic standards is on the FOA website in

The Technical Guide to Core Fiber Optic Cable Jera Standards and ...

This technical guide outlines the benchmark fiber optic cable standards and physical validation methodologies required to survive extreme environmental stress, while illustrating how

Guidelines Corning Recommended Fiber Optic Test

troduction This paper explains the recommended guidelines for testing an installed fiber op. ic system. Fiber optic testing of a newly installed system not only verifies that the system meets its design

Optical Fiber Performance and Reliability Assessment | UL

We can assess fiber-optic products for performance and reliability to many published industry standards, such as the Telcordia GR-series standards, international fiber-optic performance standards and to

IEC 60794-1-21 Basic Optical Cable Test Procedures – Mechanical

This test method applies to optical fibre cables which are tested at a particular tensile strength in order to examine the behaviour of the attenuation and/or the fibre elongation strain as a

Fiber Optic Performance Testing Services

Learn more about which standards and requirements apply to your fiber optic product, and how UL Solutions testing can help you manage compliance. We help the information and communications

Fiber Optic Performance Testing Services

Manufacturers of fiber optic products must demonstrate compliance to various safety and performance standards and requirements in order to achieve market access goals and build customer trust. UL

© 2026 QK FIBER SYSTEMS - All rights reserved

Fiber Optic & Cable Standards Guide | FiberMania

Fiber optic networks are built on well-defined standards that ensure quality, performance, and interoperability. This article explains eight of the most

Verification of Optical Fiber and Cable Reliability

Optical and material performances of the cable under mechanical stress were compared to historical test data on the single-armored, six-position, loose-tube cable design. These tests were performed in

Fiber Testing | Fiber Optic Cable Testing Methods & Top Tools

Fiber Optic Testing Fiber testing encompasses the processes, tools, and standards used to test fiber optic components, fiber links, and deployed fiber networks. This includes optical and mechanical

Optical Fiber Cable Design & Reliability

While a small percentage, we can examine the “intrinsic” cable failures and what is done to prevent them. Some questions about intrinsic failures: Does the glass inside the cable degrade? Break?

General tests on fiber optic cable

In order to ensure the reliability of the delivered fiber optic cables, the cable must be tested for type tests which includes mechanical, optical, environmental and compatibility tests.

Standards Updates for Optical Fiber: What You Need to Know

Standards Updates for Optical Fiber: What You Need to Know Industry standards for optical fiber cables, components, systems and applications continually evolve and progress in an

Standards-based factory testing of fiber-optic cable

Standards-based factory testing of fiber-optic cable Users of fiber-optic cable should know what tests are performed, and why. Andrew K. Straw The final installed performance of a structured cabling system

Related Video Reference

This video was associated with the source search result. Verify technical details against current product documentation and project requirements.

© 2026 QK FIBER SYSTEMS - All rights reserved

Contact Us

Continue your research online:

Website: https://qualitykitchens.co.za
Technical inquiry: https://qualitykitchens.co.za/project-desk.html
African project coordination: Umhlanga Ridge, Durban, KwaZulu-Natal, South Africa

This document is for preliminary research. Verify specifications against current standards, product documentation and project requirements.

© 2026 QK FIBER SYSTEMS - All rights reserved